Electrical diagram	Drawing

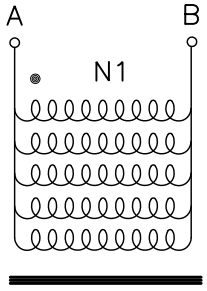

6 Winding. 5xø1.25mm

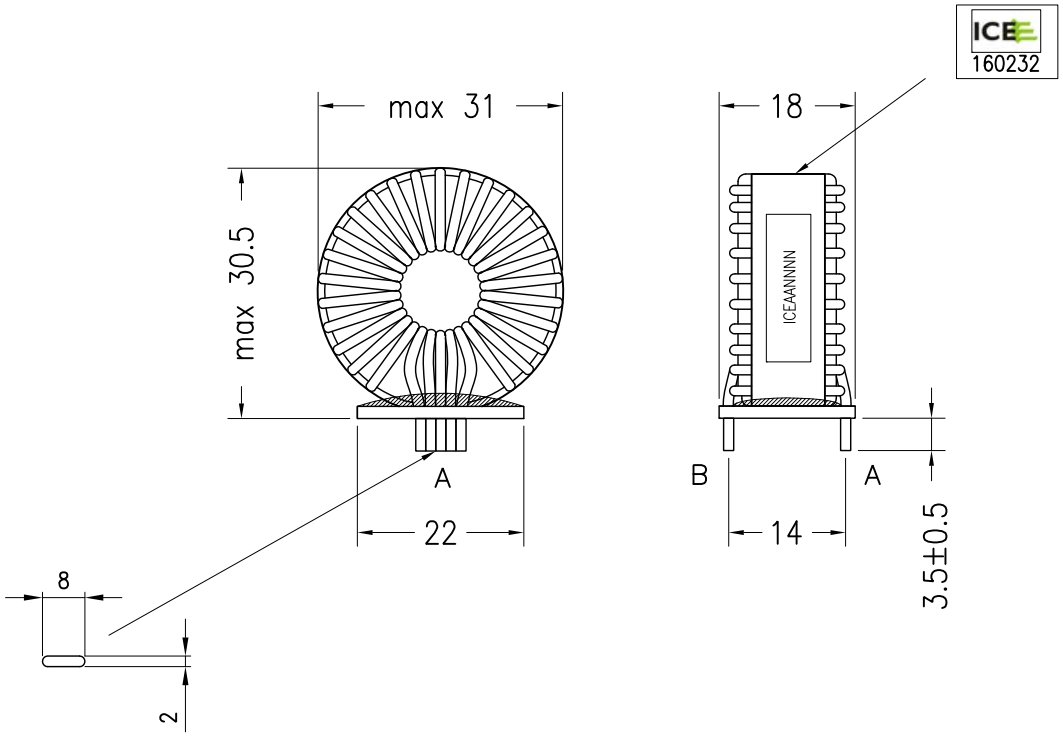

2011/65/UE (RoHS-2) Compliant

Dimensions in millimeters

Electrical characteristics

Inductance N1 @ 10kHz – 100mV	5.19 ÷ 6.10 µH
Resistance N1 @ DC	< 1 mΩ
Core – material	58930-A2 or eq.

REV	APPR DATE	REF. MOD.	DESCRIPTION OF MODIFICATION	EDITING	CHECKING AND APPROVAL
01	21.11.17		Emissione	A. Ridolfi	D. Di Giorgio

DESCRIPTION: **Output choke ZVS 800W – 160232**

Mod. AQ 05.09

DOCUMENT TYPE	P/N	REVISION	RELEASE DATE	PAGE
S.T.	8024.6301.070	01	21.11.17	1of1